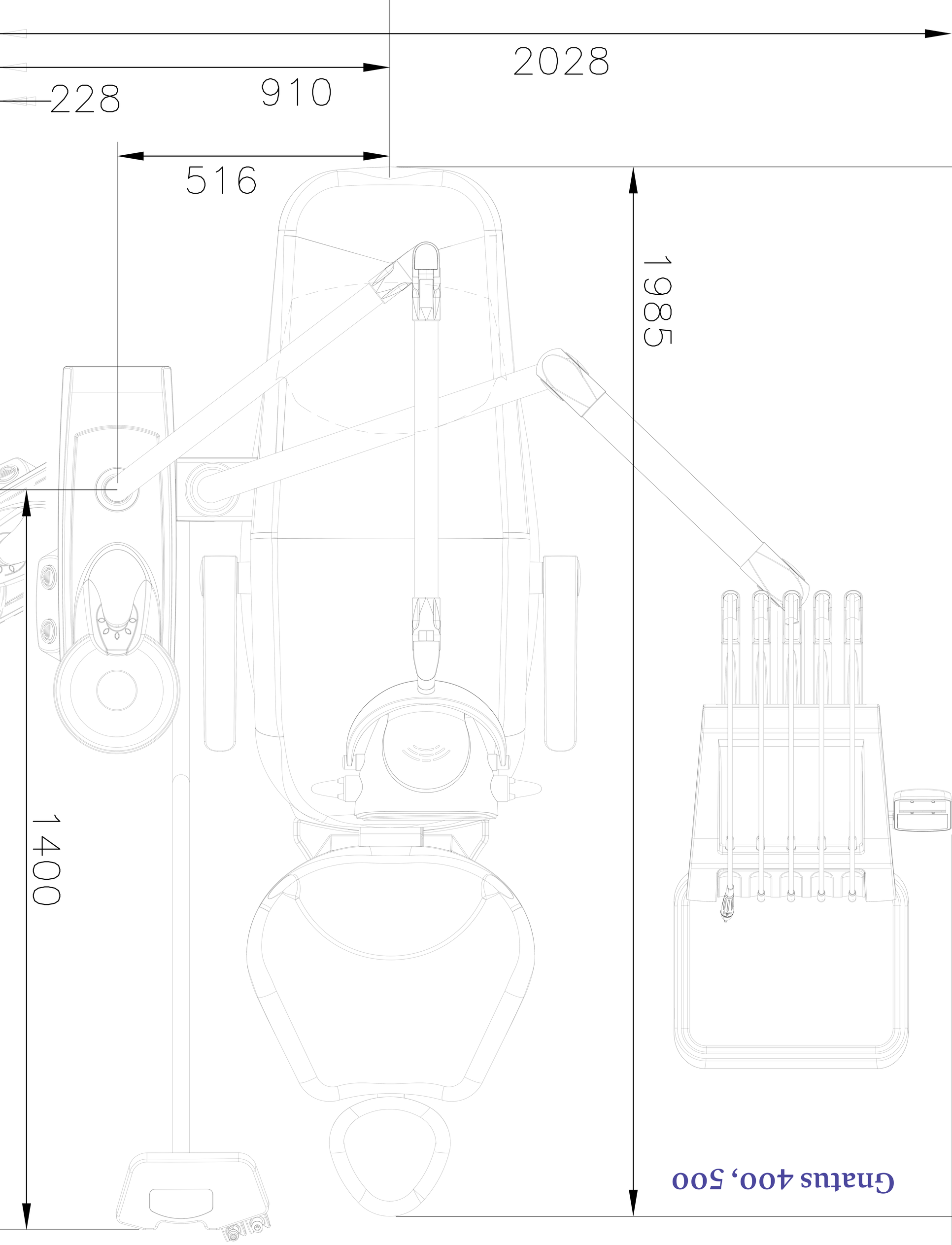

Gnatus 400, 500