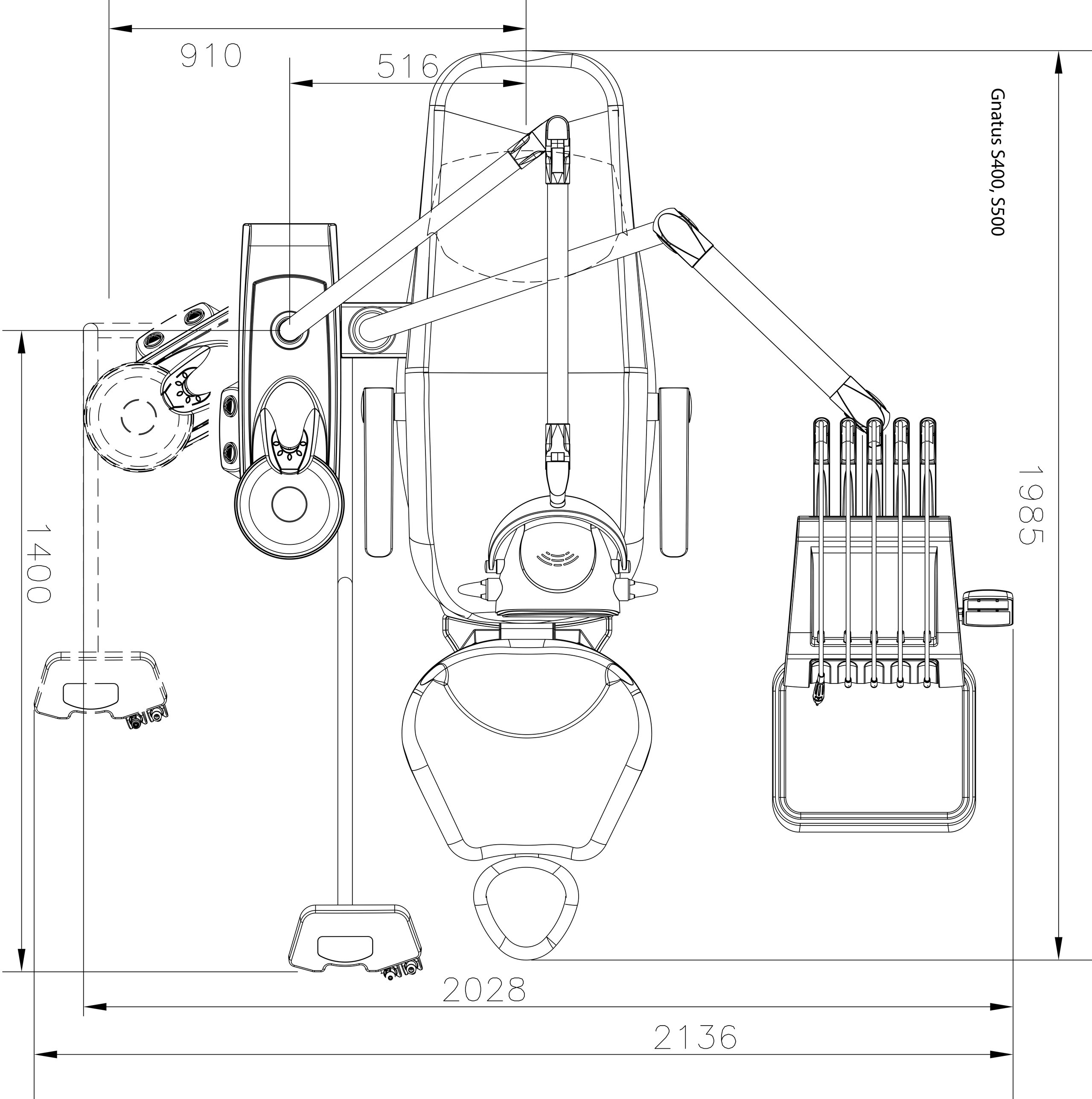

Gnatus S400, S500